ZHUHAI CORRECT PACK TECHNOLOGY CO,.LTD

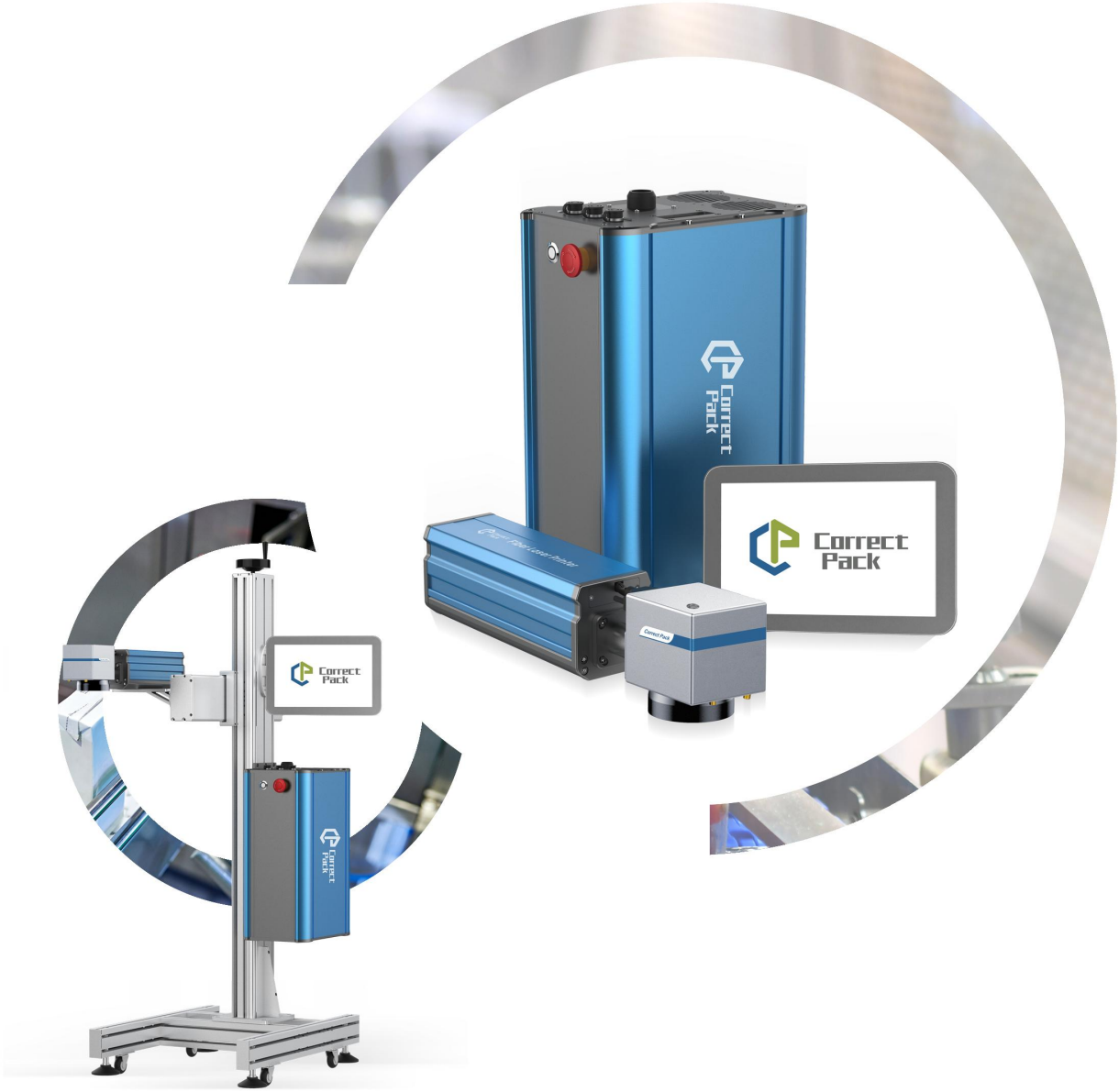

CE

Correct Pack is a trusted provider of laser coder.
All the laser coders are
produced following CE standard strictly.

FIBER LASER SERIES

The Best Solutions for Creating High Accuracy and Efficiency Marking

Product Introduction

The fiber laser marking machine series are aim to meet the needs of manufacturers who use robust, high density materials on medium-speed or high-speed production lines. Such as factories of the beverage, wire,cable, pipe and pharmaceutical industries. Increasing production volume, as well providing high-quality markings.

01 High Performance Running

The durable laser source, minimal maintenance requirements and low consumables help reduce unplanned and planned downtime and ensure minimal manual intervention during production.

02 Fast and Accurate Coding

The advanced fiber laser controller effectively reduce the operator's input during the coding and marking process, as well avoiding coding errors. With red light correction,the marking area can be quickly and automatically positioned.

03 Flexible Installation

Provide a variety of standard configuration options and accessories, which ensures the laser coding machine can be used in conjunction with your production workflow.

04 Easy to Use

Practical and reliable operating software further maximizes the utilization rate of the laser coding machine, and quickly implements installation settings and production line conversion steps.

Working Environment

- External Temperature 0°c -45°c （relative humidity）
- Operating Temperature 0°c -60°c
- Air Humidity 45-75%, non-condensing

Product Parameters

Item Type / Model	CP6020F	CP6030F	CP6050F
Machine material	Aluminum structures+Stainless steel		
Laser	Fiber laser generator		
Output power	20W	30W	50W
Laser wave length	1064nm		
Lens	High precision 2D scanning system		
Marking speed	≤8000 mm/S		≤10000 mm/S
Main control system	Highly integrated mainboard,with embedded 10.4 inch controller		
Cooling system	Air cooled		
Focuszoom lens	190mm double red light focusing		
Marking scale type	Raster fonts, vector fonts are available		
Min.line width	0.012mm		
Repeatability accuracy	0.003mm		
Working area	50*50mm; 110*110mm; 220*220mm; 300*300mm; 450*450mm; other optional		
Positioning	Red light positioning and double red light focusing		
Lines of marking	No limited in working area		
Speed	0~200m/min		
Power	110VA/220VA		
Power Consumption	600W		800W

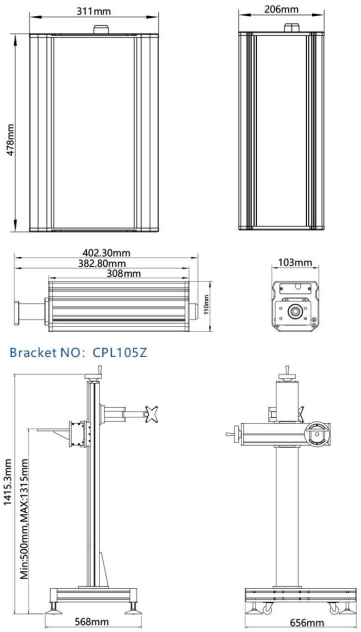

Correct Pack
ZhuHai Correct Pack Technology Co., Ltd.
Tel:+86 756 7255229
www.correct-pack.com
Tel:+86 756 7255635
info@correct-pack.com
Add:No.108 Xiang' ao Road,Hengqin New District,Zhuhai City, Guangdong Province, China.